FARO
BARCELONA

reddot award 2019
winner

DESIGN AWARD 2019

GERMAN DESIGN AWARD 2019

INVITING

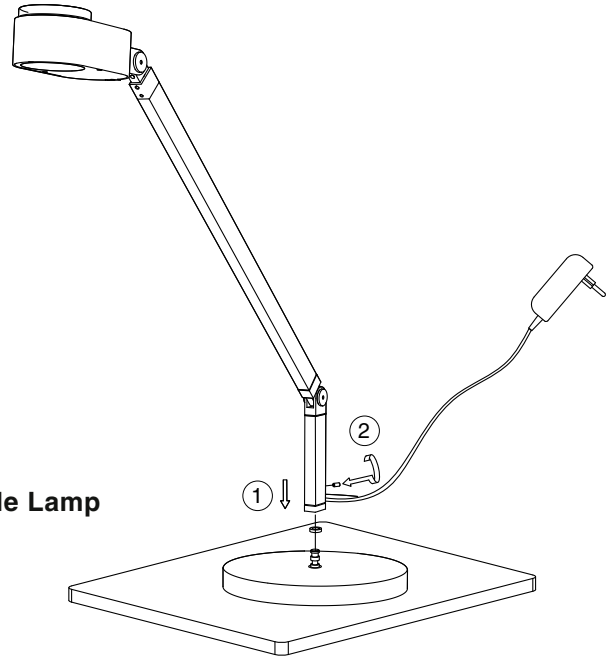

Table Lamp

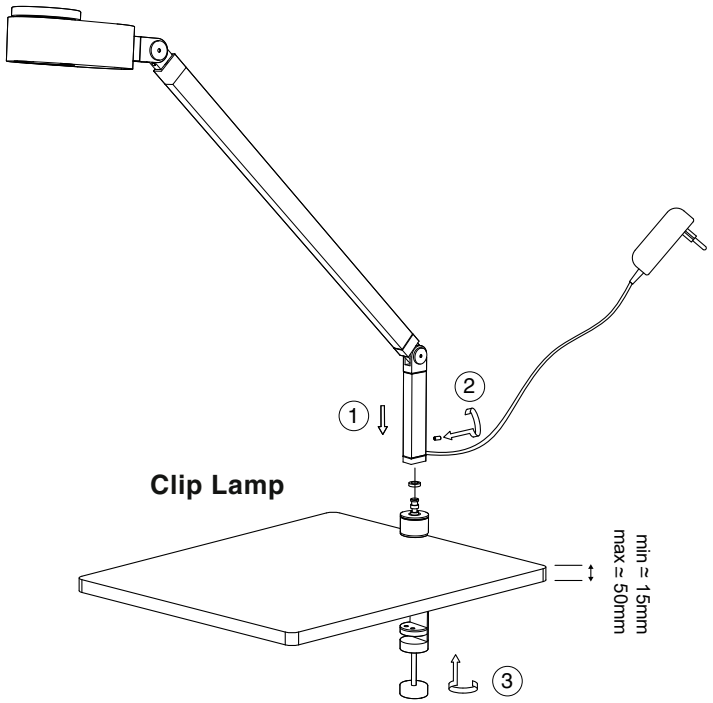

Clip Lamp

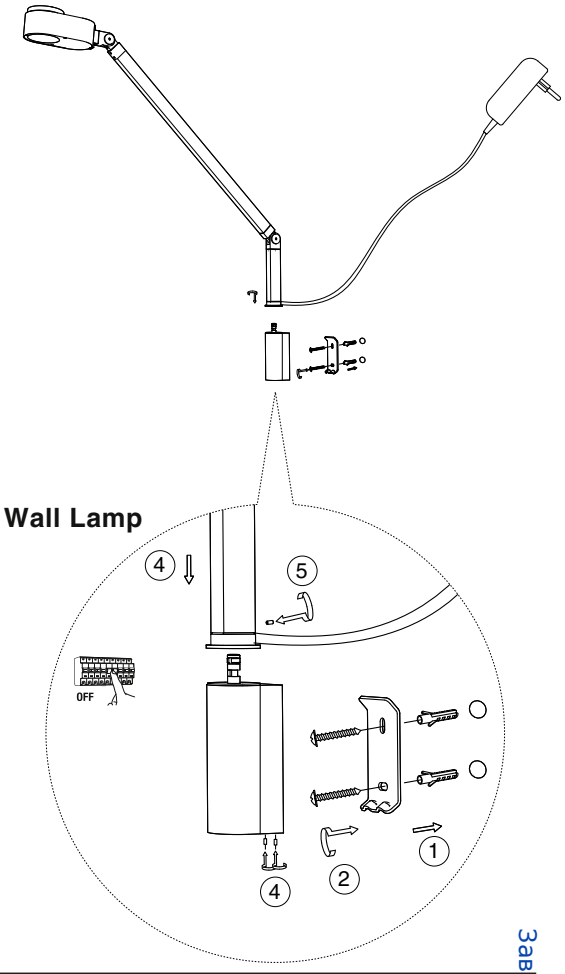

Wall Lamp

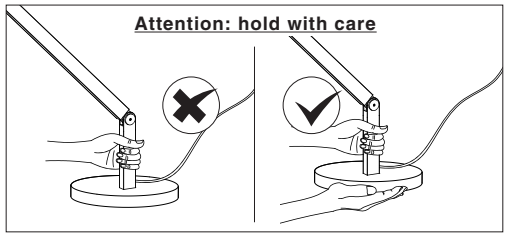

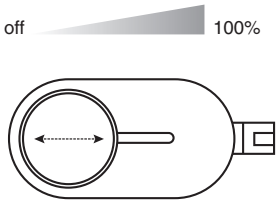

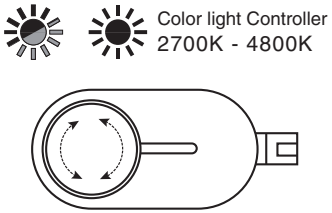

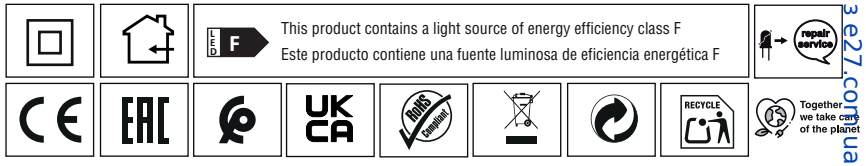

завантажено з e27.com.ua