Завантажено з e27.com.ua

Kanlux

SHIRO DLO
SHIRO DLL

GB DE FR ES IT DK NL SE FI NO PL CZ SK HU RO/MD GR MK SI RS/HR BG RU/BY UA LT LV EE

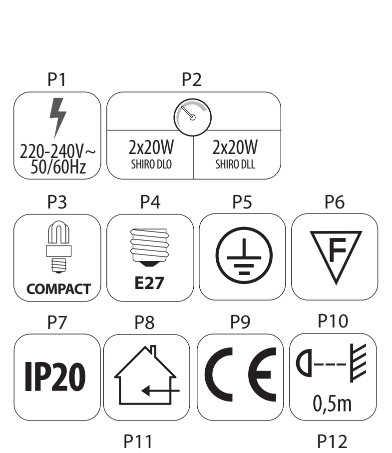

www.kanlux.com

2011/09-1

GB

INTENDED USE / APPLICATION
Product designed for the use in households and for other similar general applications.
MOUNTING
Technical changes reserved. Read the manual before mounting. Mounting should be performed by an appropriately qualified person. Any activities to be done with disconnected power supply. Exercise particular caution. Mounting diagram: see pictures. Check for proper mechanical fastening and connection to electrical power prior to first use. The product can be connected to a supply network which meets energy quality standards as prescribed by law.
FUNCTIONAL CHARACTERISTICS
Product for indoor use.
USAGE GUIDELINES / MAINTENANCE
Any maintenance work must be performed when the power supply is cut off and the product has cooled down. Clean only with soft and dry cloths. Do not use chemical detergents. Do not cover the product. Ensure free air access. The light source becomes heated to a high temperature. Product may heat up to a higher temperature. Light sources with parameters provided in the manual must be used in the product. Replacement of light source to be performed after the product cools down: see pictures. Product can only be supplied by rated voltage or voltage within the range provided. It's forbidden to use the product with damaged protective cover. Product must not be used in unfavourable environment, e.g. dust, moisture,water, vibrations, etc.
EXPLANATIONS OF SYMBOLS USED
P1: Rated voltage, frequency.
P2: Rated power.
P3: Energy efficient compact fluorescent lamp.
P4: Base / holder.
P5: Class I
A product in which protection against electric shock is provided not only by means of basic insulation but also through additional safety measures, i.e. extra protective circuit to which protective conductor of the fixed feeding installation needs to be connected.
P6: This symbol means that the product can be installed and operated in/on a surface made of materials which are normally flammable.
P7: Protection against solid foreign objects bigger than 12mm provided.
P8: Use only indoors.
P9: Product meets the requirements of EU directives.
P10: The symbol describes the minimal distance of a light fixture (its light source) from the spots and objects that it's illuminating.
P11: The chipped globe, screen or protective shield must be replaced immediately.
ENVIRONMENTAL PROTECTION
Keep your environment clean. Segregation of post-packaging waste is recommended.
P12: This labelling indicates the requirement to selectively collect waste electronic and electrical equipment. Products labelled in this way must not be disposed of in the same way as other waste under the threat of a fine. These products may be harmful to the natural environment and health, and require a special form of recycling/ neutralising. Products labelled in this way should be returned to a collection facility for waste electrical and electronic goods. Information on collection centres is provided by local authorities or sellers of such goods. Used items can also be returned to the seller when new product is purchased, in quantity no larger than the purchased item of the same type. The above rules regard the EU area. In the case of other countries, regulations in force in a given country must be applied. Contacting the distributor of our products in a given area is recommended.
COMMENTS / GUIDELINES
Failure to follow these instructions may result in e.g. fire, burns, electrical shock, physical injury and other material and non-material damage. For more information about Kanlux products visit www.kanlux.com
Kanlux S.A. shall not be responsible for any damage resulting from the failure to follow these instructions.

DE

VERWENDUNG / ANWENDUNG
Produkt für die Verwendung in Haushalten und zur allgemeinen Verwendung.
MONTAGE
Technische Änderungen vorbehalten. Lesen Sie vor der Montage die Anleitung. Die Montage sollte von einer Person durchgeführt werden, welche die erforderliche Befugnis hat. Alle Tätigkeiten sind bei abgeschalteter Energieversorgung durchzuführen. Besondere Vorsicht ist zu wahren. Montageschema: s. Zeichnungen. Vor der Inbetriebnahme muss die ordnungsgemäße mechanische Befestigung und der elektrische Anschluss geprüft werden. Das Produkt kann an ein Elektrizitätsnetz angeschlossen werden, das die gesetzlich festgelegten Energiestandards erfüllt.
FUNKTIONELLE EIGENSCHAFTEN
Produkt zur Verwendung im Innenbereich.
BETRIEBSHINWEISE / WARTUNG
Die Wartung bei ausgeschalteter Versorung und nach Erkalten des Produkts durchführen. Nur mit weichen und trockenen Stoffen säubern. Keine chemischen [illegible]

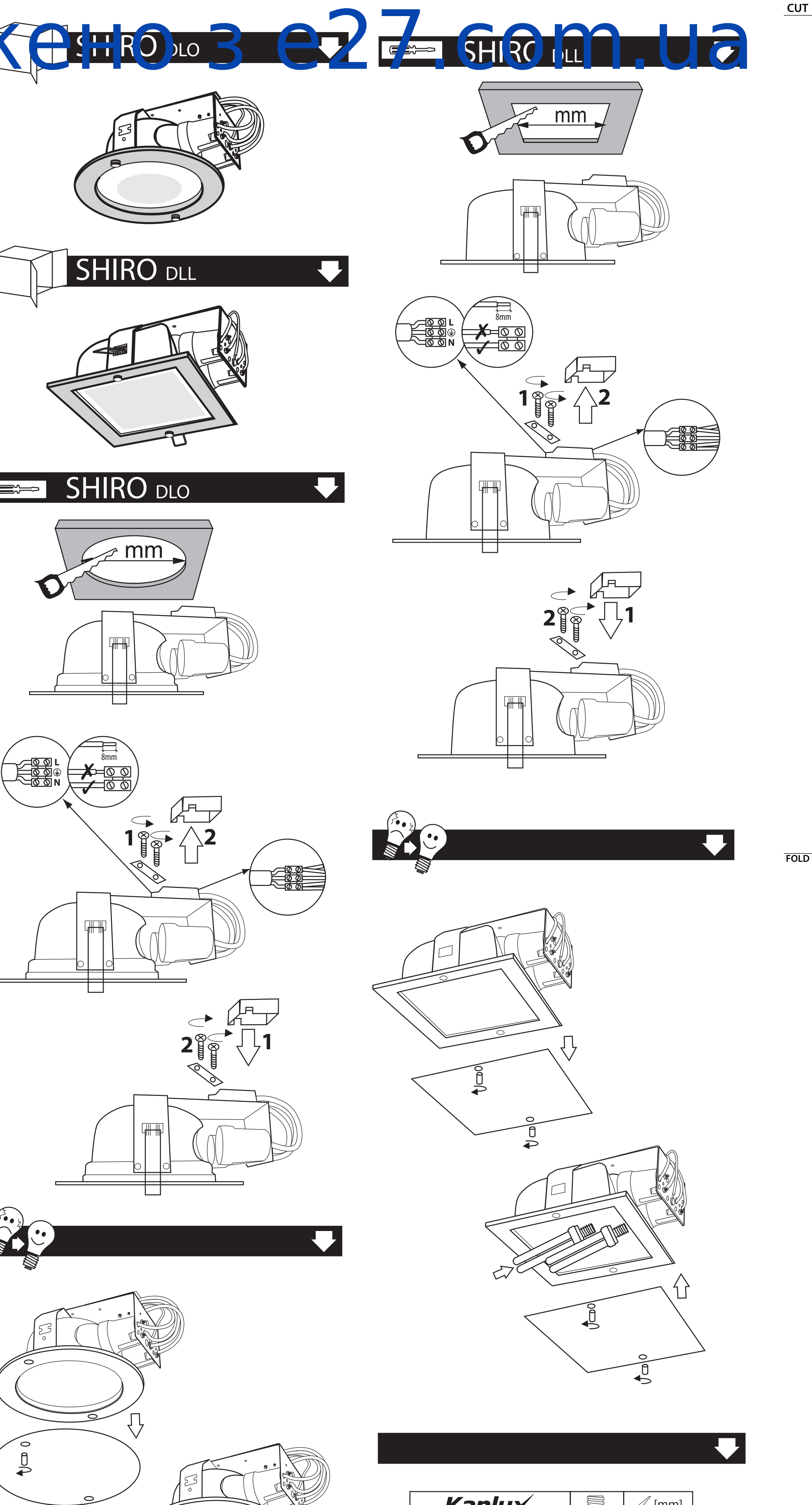

Kanlux	E27 socket	[mm]
SHIRO DLO	E27	∅160
SHIRO DLL	E27	150x150

Kanlux S.A., ul. Objazdowa 1-3, 41-922 Radzionków
Distributor: Kanlux s.r.o., Sadová 618, 738 01 Frýdek-Místek
Distributor: Kanlux s.r.o., Štefánika 379/19, 911 01 Trenčín
Forgalmazza: Kanlux Kft., 9026 Győr, Bácsai út 153/b
ТОВ Kanlux, Вул. Сім'ї Сосніних 3 офіс 526, 03148 м. Київ